# ECVA Variable Speed, ATL Bypass, Fire Pump Controller

**MASTER**

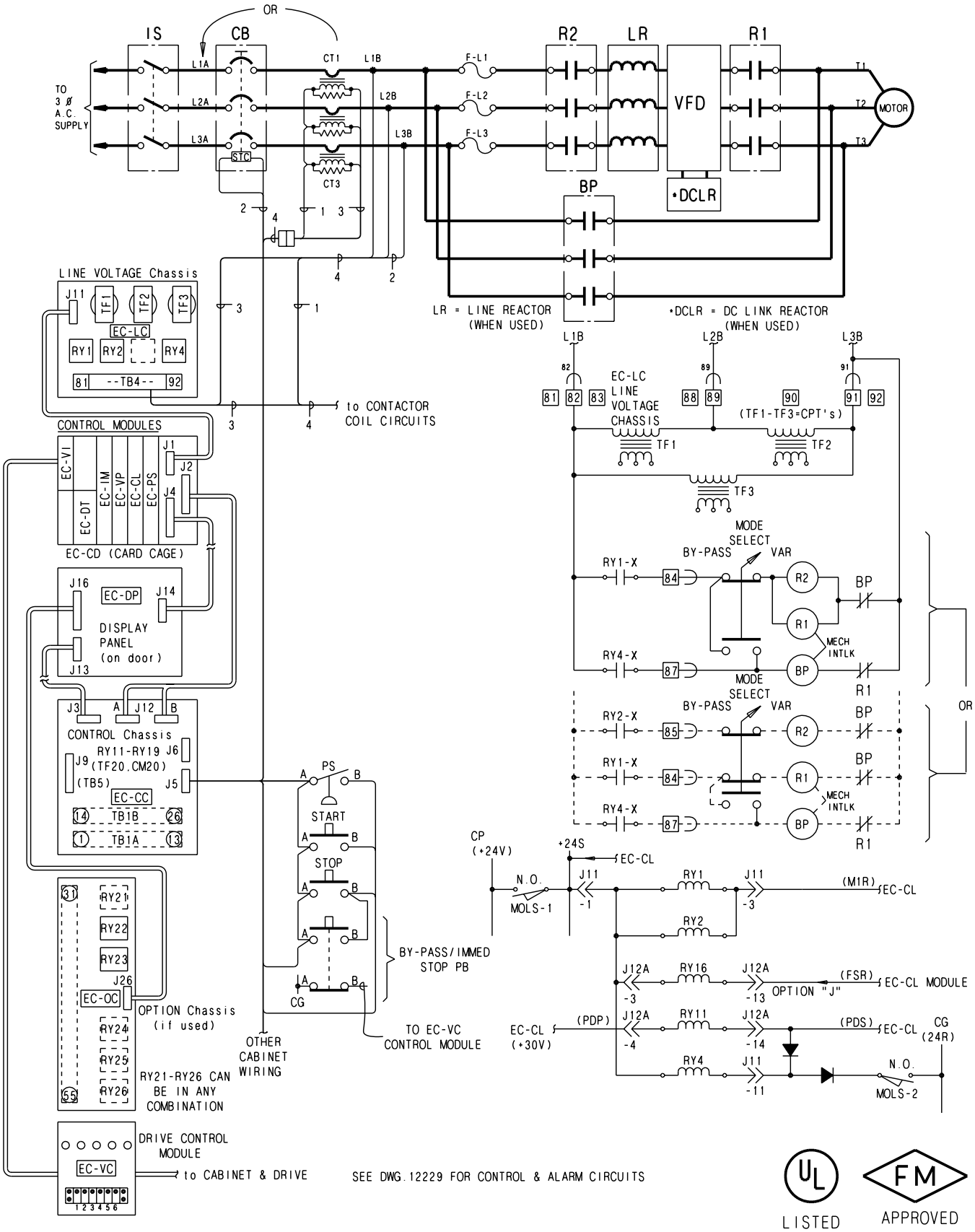


| | | | |
|---|---|---|---|
| **Master Control Systems Inc.**<br>LAKE BLUFF, ILLINOIS U.S.A. | Model ECVA<br>Schematic Diagram | Date | 12 February 2009 |
| | | Drawing | WB12227 Issue 5 |