ECH Fire Pump Controller Mod. 19, 20 & 20A

MASTER

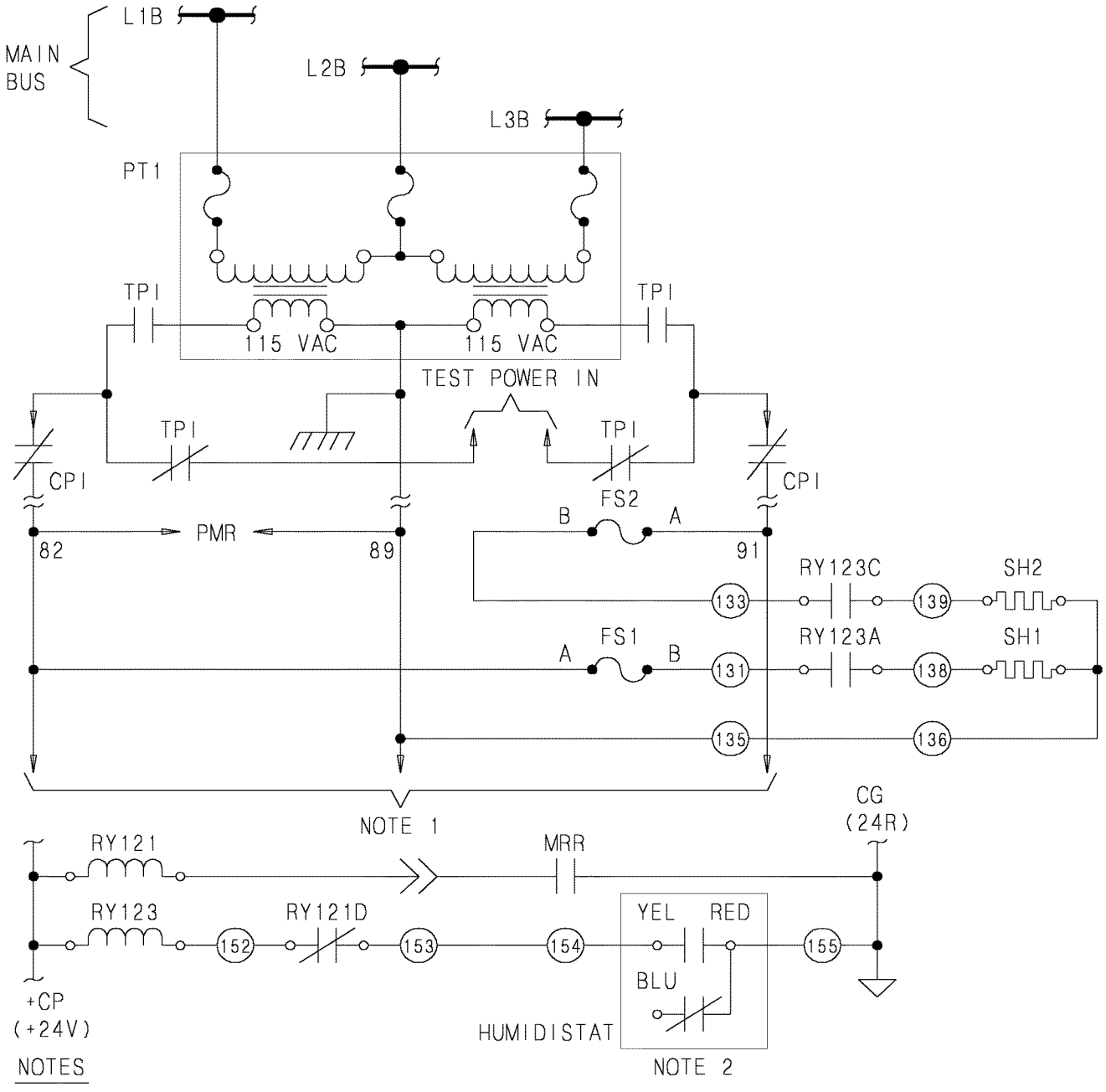

NOTES

1) To EC-LC Chassis (Term.82,89,91) & Other Motor Control Circuitry. See Model ECH* Main Control Schematic for Details.

2) Mod.19=Jumper,Mod.20=Thermostat,Mod.20A=Humidistat

Master Control Systems Inc. LAKE BLUFF, ILLINOIS U.S.A.	Factory Installed Mod.19, 20 & 20A Wiring Diagram	Date 12 April 2001 Drawing WB13680	Issue 1